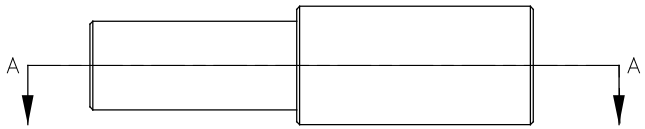

PLAN

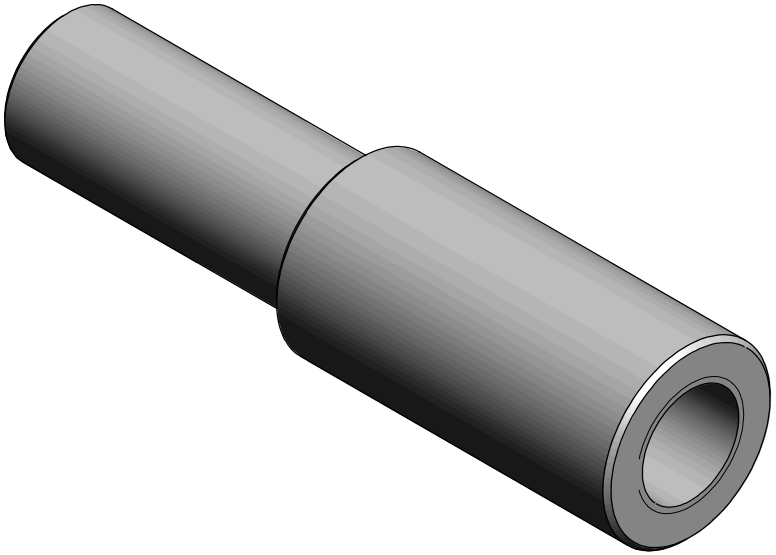

TRIMETRIC

Champhor .5mm by .5mm

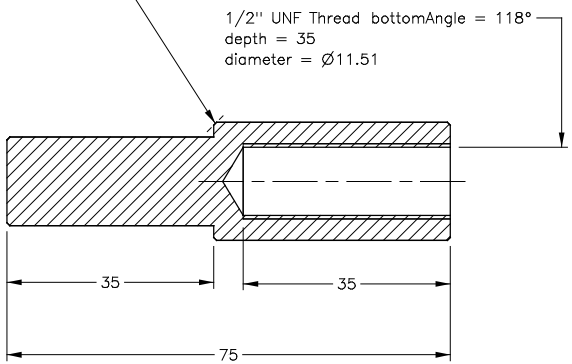

A – A

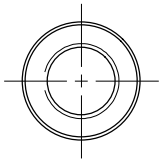

RIGHT

REV	DESCRIPTION	BY	DATE

TITLE

	SCALE	DATE
	DRAWN BY	
	CHECKED BY	
	APPROVED BY	
PROJECT NUMBER	DRAWING NUMBER	